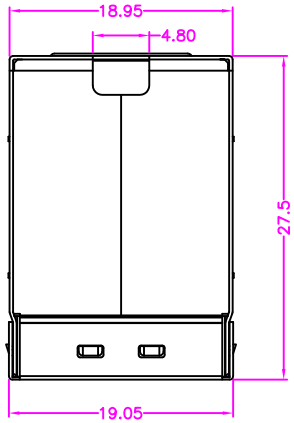

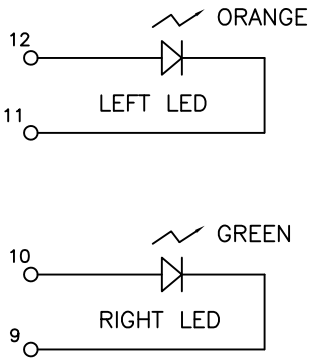

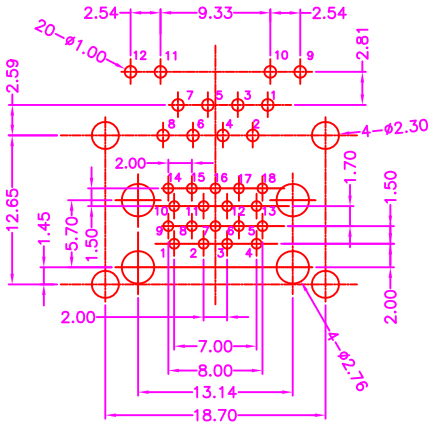

MATERIALS

HOUSING: THERMOPLASTIC (UL 94V-0)
SHELL: SPCC, NICKEL PLATING
TERMINAL: COPPER ALLOY, GOLD PLATED ON CONTACT AREA
TIN PLATING ON SOLDER TAIL

SPECIFICATION

USB
CURRENT RATING: 1.5 AMP MAX
DIELECTRIC WITHSTANDING: 500V AC FOR ONE MINUTE
CONTACT RESISTANCE: 30m OHMS MAX
INSULATION RESISTANCE: 1000M OHMS MIN AT DC 500V
OPERATION TEMPERATURE: -55°C~+105°C

RJ45
CURRENT RATING: 1.5 AMP MAX
DIELECTRIC WITHSTANDING: 500V AC FOR ONE MINUTE
CONTACT RESISTANCE: 30m OHMS MAX
INSULATION RESISTANCE: 500M OHMS MIN AT DC 500V
OPERATION TEMPERATURE: -55°C~+105°C

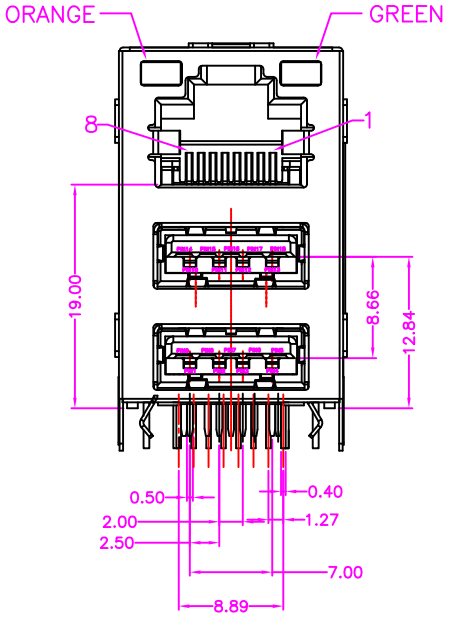

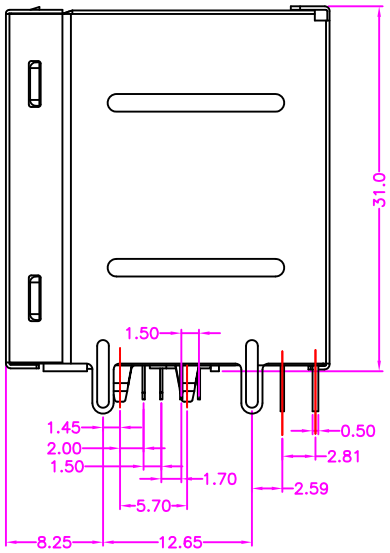

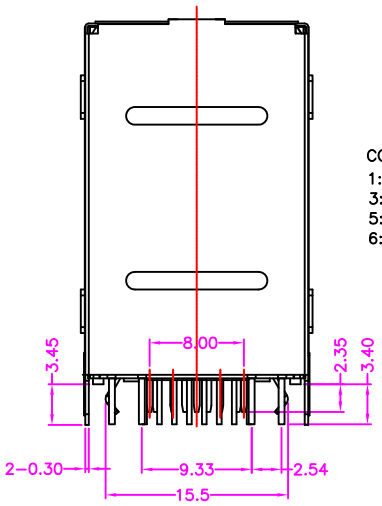

PART NUMBER:
71MJUS - 3 0 * T - 9 1 1

SERIES
NO. OF POS.
CONTACT PLATED OPTION
1: GOLD FLASH
3: 3u" GOLD
5: 5u" GOLD
6: 10u" GOLD
TIN PLATING ON SOLDER TIAL
TRAY PACKAGE

REV.	DESCRIPTION	DATE
A	RELEASE	2011.12.6

Cyberconn Technology Co., Ltd.
www.cyberconn.com.tw Tel:+886-3-4951314

TOLERANCES	TITLE	COMBO CONNECTOR SERIES RJ 45 + USB 3.0 FEMALE, PCB MOUNT, R/A, METAL SHIELD, WITH LED				
X.X ±0.3 X.XX ±0.2 X.XXX ±0.1 Angle ±5°	DRAWED BY: Janice	CHECKED BY: Lion	APPROVED BY: Benson			
	UNIT	SCALE	SIZE	DRAW NO.	REV.	Sheet
10074	MM	NONE	A4	71MJUS-002	A	1/1