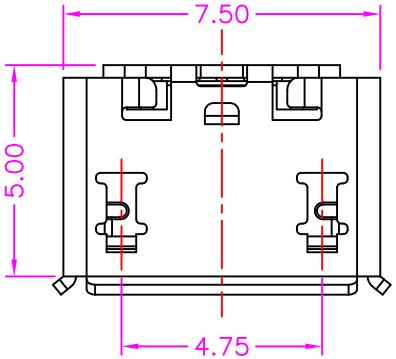


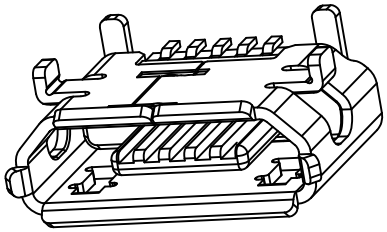

MATERIALS

HOUSING: LCP (UL 94V–0), BLACK
SHELL: STAINLESS STEEL, TIN PLATING
TERMINAL: COPPER ALLOY, GOLD PLATING

SPECIFICATION

CURRENT RATING: 1.8 AMP MAX (ONLY PIN 1, 5), OTHER 1 AMP MAX
DIELECTRIC WITHSTANDING: 100V AC FOR ONE MINUTE
CONTACT RESISTANCE: 30m OHMS MAX
INSULATION RESISTANCE: 100M OHMS MIN AT DC 500V
OPERATION TEMPERATURE: –25°C~+105°C

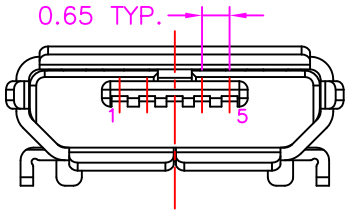


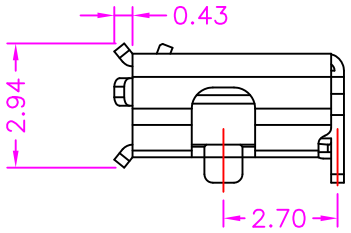


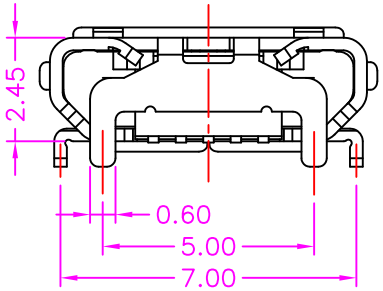


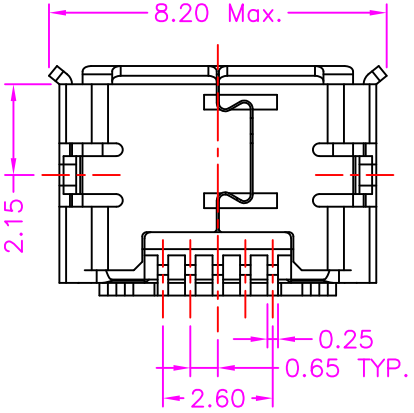


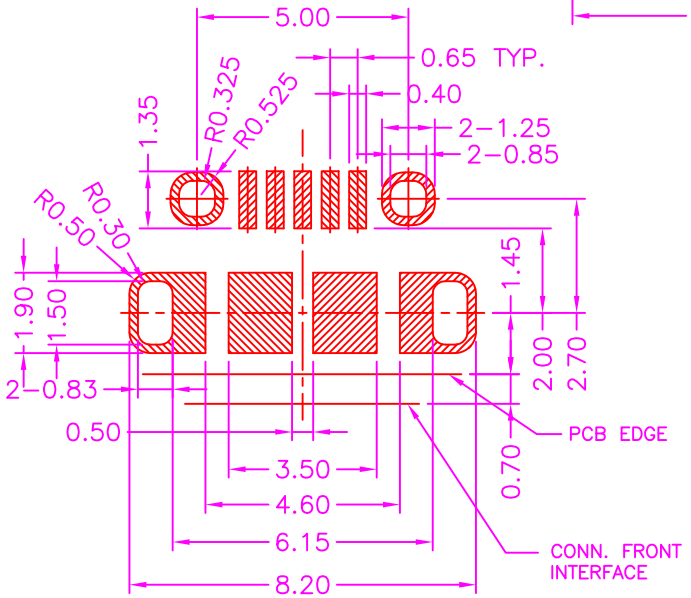


P.C.B LAYOUT
TOP VIEW ±0.05

PART NUMBER:
2USTA – 0 5 * – 1 * 0

SERIES
NO. OF POS.
CONTACT PLATED OPTION
1: GOLD FLASH
3: 3u" GOLD
5: 5u" GOLD
7: 15u" GOLD
9: 30u" GOLD

PACKAGE OPTION
2: TAPE REEL
3: TUBE

| REV. | DESCRIPTION | DATE |
|---|---|---|
| A | RELEASE | 2012.1.11 |

**Cyberconn Technology Co., Ltd.**
www.cyberconn.com.tw Tel:+886-3-4951314

| TOLERANCES | TITLE | USB CONNECTOR SERIES<br>MICRO USB B TYPE, PCB MOUNT, SMT<br>METAL SHIELD, FEMALE | | | | |
|---|---|---|---|---|---|---|
| X.X ±0.3<br>X.XX ±0.2<br>X.XXX±0.1<br>Angle ±5° | DRAWED BY | CHECKED BY | APPROVED BY | | | |
| | Janice | Lion | Benson | | | |
| | UNIT | SCALE | SIZE | DRAW NO. | REV. | Sheet |
| 10001 | MM | NONE | A4 | 2USTA–001 | A | 1/1 |