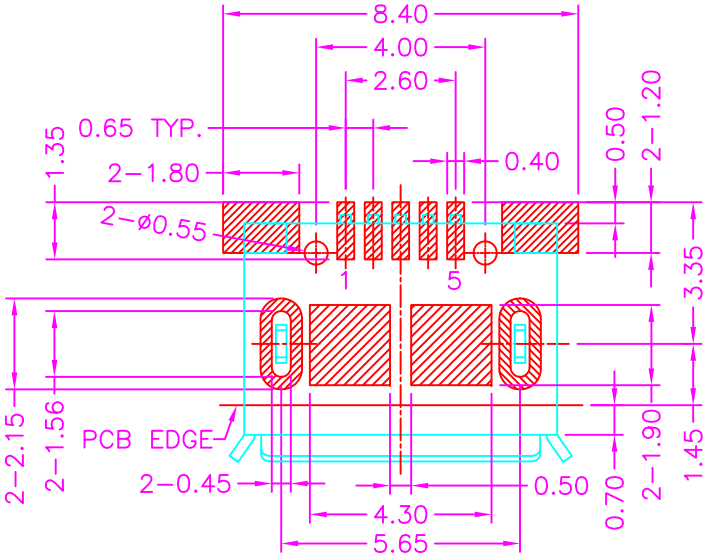

P.C.B LAYOUT
TOP VIEW ±0.05

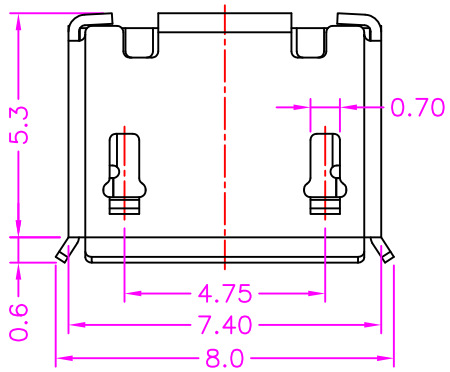

PART NUMBER:
2USTB – 0 5 * * – 1 * A *

SERIES — 2USTB
NO. OF POS. — 05
CONTACT PLATED OPTION — **
1: GOLD FLASH
3: 3u" GOLD
5: 5u" GOLD
7: 15u" GOLD
9: 30u" GOLD
SHELL MATERIALS OPTION — –1
BLANK: COPPER ALLOY
S: STAINLESS STEEL
PACKAGE OPTION — *
2: TAPE REEL
3: TUBE
POST OPTION — A*
BLANK: W/O POST
P: WITH POST

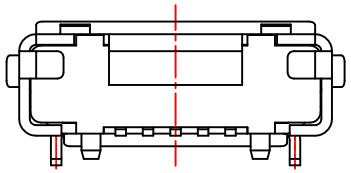

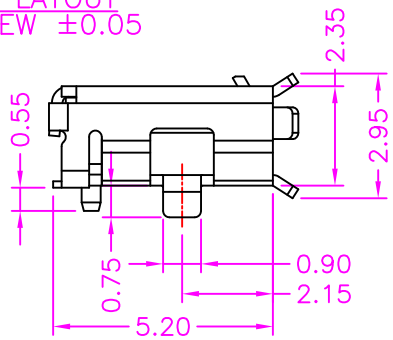

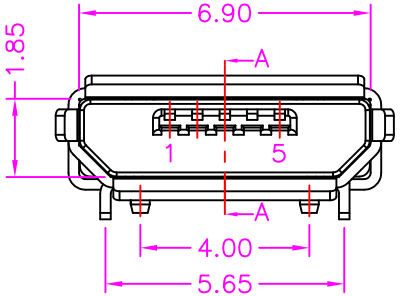

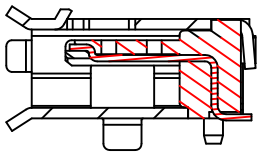

SECTION A–A

MATERIALS

HOUSING: HI–TEMP. PLASTIC (UL 94V–0), BLACK
SHELL: COPPER ALLOY OR STAINLESS STEEL, NICKEL PLATING
TERMINAL: COPPER ALLOY, GOLD PLATING

SPECIFICATION

CURRENT RATING: 1.8 AMP MAX (ONLY PIN 1, 5), OTHER 1 AMP MAX
DIELECTRIC WITHSTANDING: 100V AC FOR ONE MINUTE
CONTACT RESISTANCE: 30m OHMS MAX
INSULATION RESISTANCE: 100M OHMS MIN AT DC 500V
OPERATION TEMPERATURE: –30°C~+80°C

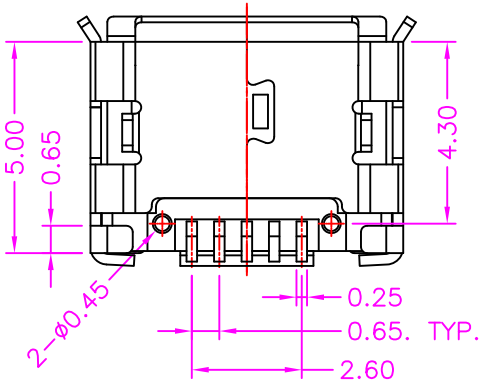

REV.	DESCRIPTION	DATE
A	RELEASE	2015.9.16

Cyberconn Technology Co., Ltd.
www.cyberconn.com.tw Tel:+886-3-4951314

TOLERANCES	TITLE	USB CONNECTOR SERIES MICRO USB B TYPE, PCB MOUNT, SMT METAL SHIELD, FEMALE WITH POST				
X.X ±0.3 X.XX ±0.2 X.XXX ±0.1 Angle ±5°	DRAWED BY	CHECKED BY	APPROVED BY			
	Tina	Lion	Benson			
	UNIT	SCALE	SIZE	DRAW NO.	REV.	Sheet
10134	MM	NONE	A4	2USTB–010	A	1/1